Do NOT stand or step on shelf. Serious injury may result.

Shelf Plan

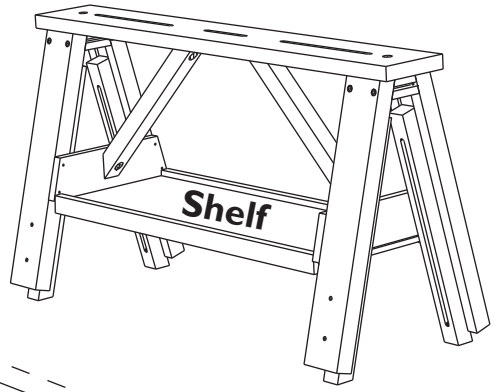

end

31½”

33⅛”

All holes are 5/32” diameter, and are ⅜“ from ends. Corner holes are 1” in from edges.
Middle holes are centered along ends of shelf.

Shelf

Edge Band

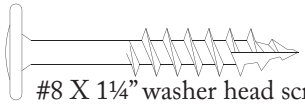

#8 X 1¼” washer head screw

⅜”

1”

edge

end

11¼”

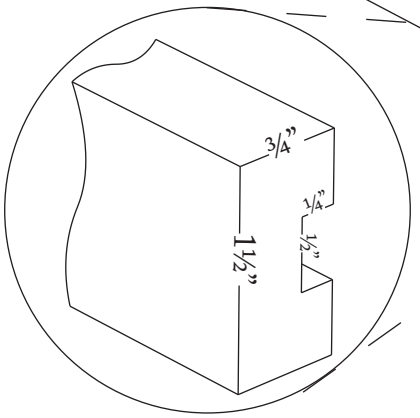

Use 6 self-drilling #8 X 1¼” washer head screws to attach shelf to bottom edges of bottom braces. Otherwise pre-drill 7/64” holes in bottom edges of bottom braces and use round or wafer head screws. You may also want to add washers (under screw heads) to make larger “bearing surfaces”.

Shelf is 7/16“ waferboard or Oriented Strand Board (OSB). Edge bands are ¾” X 1½“ hard or soft wood. Rout ½” W X ¼” D groove down center of edgebanding and attach to shelf with waterproof glue. Either clamp in place or use several dots of hot melt glue to hold edge-banding in place until rest of glue dries.

Center the edgebands on the edges of the shelf.

Keep all your tools and other necessities close by yet out of the way while using your **LEVEL-it®**. It’s easy with this handy shelf you can make! Here’s how!

www.level-it.com

© 2001 ASHER INDUSTRIES Ltd.